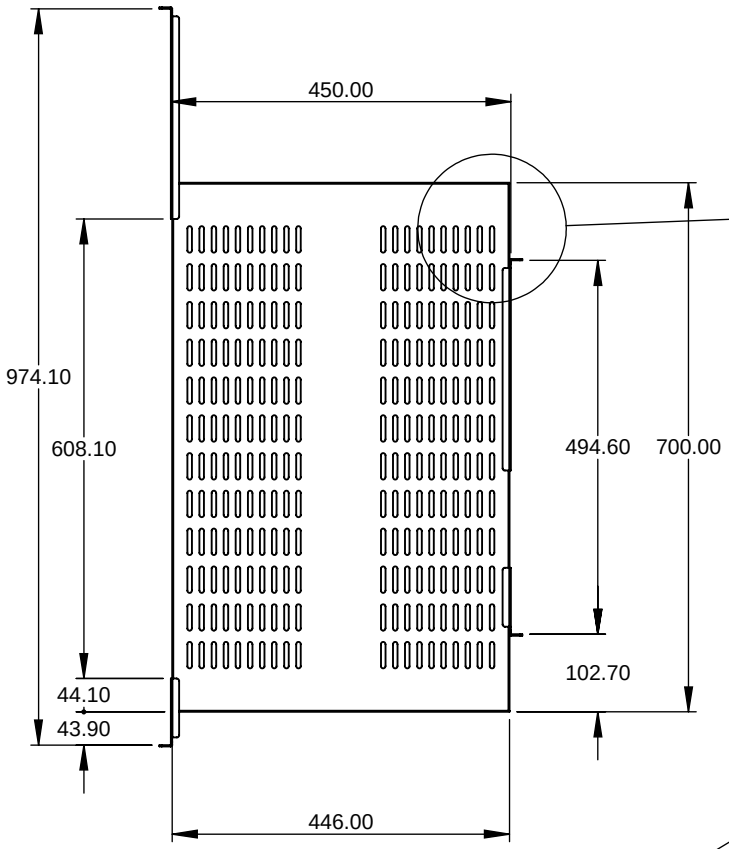

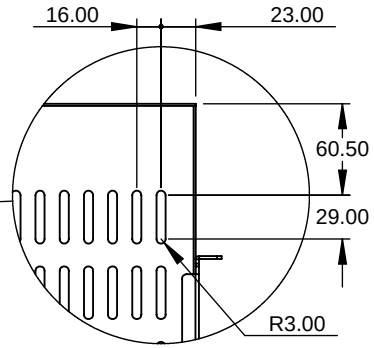

DETAIL A
SCALE 1 : 5

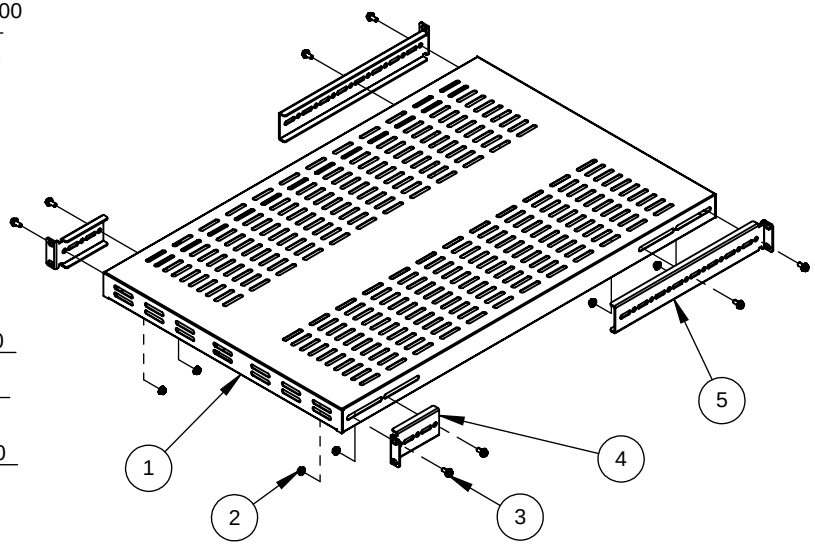

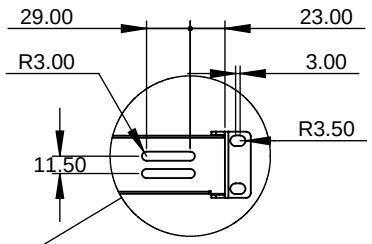

DETAIL B
SCALE 1 : 5

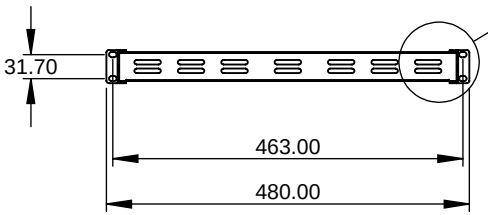

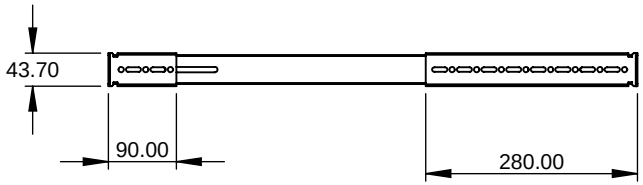

PART NO.	DESCRIPTION	QTY
1	BASE SHELF	1
2	M5 NUT	8
3	M5 SCREW	8
4	BRACKET 01	2
5	BRACKET 02	2

THIRD ANGLE PROJECTION

GENERAL NOTES

DIMENSIONS ARE IN MM - DO NOT SCALE

THIS DOCUMENT CONTAINS CONFIDENTIAL, PROPRIETARY INFORMATION THAT IS PROPERTY OF STARTECH.COM

StarTech.com

PRODUCT ID	ADJSHELFHDV
DESCRIPTION	1U Adjustable Mounting Depth Vented Rack Mount Shelf - Heavy Duty Fixed Rack Shelf - 250lbs / 113kg

REV: A | DO NOT SCALE | SHEET : 1 OF: 1 | DATE: 6/26/2020